Experiment 18

SYNTHESIS OF YTTRIUM EUROPIUM OXIDE RED PHOSPHOR

Objective

The purpose of this experiment is to learn to synthesize red-fluorescent powder of yttrium europium oxide through a solid-state reaction, and to study its fluorescent properties.

Lab techniques

- Weighing and pulverizing chemicals.
- Operating box furnace, calcination, and ultraviolet light.

Introduction

The fluorescent screen of a television tube is composed of red, green, and blue fluorescent powders. The quality of the television image is determined by the saturation, brightness, and contrast levels of the fluorescing agents. In this experiment, students will use yttrium oxide (Y_2O_3) and europium oxide (Eu_2O_3) as starting materials to prepare $Y_{2-x}Eu_xO_3$ (x = 0.1~0.15), an inorganic fluorescent material that emits red light under ultraviolet radiation. This fluorescent material belongs to a class called photoluminescent substances. The host materials are yttrium oxide, and activators, Eu^{3+} ions, are distributed throughout the lattice. These activators, when excited by absorbing excitation energy from incoming ultraviolet rays, release electromagnetic radiation in the visible light range, as shown in Fig. 18-1.

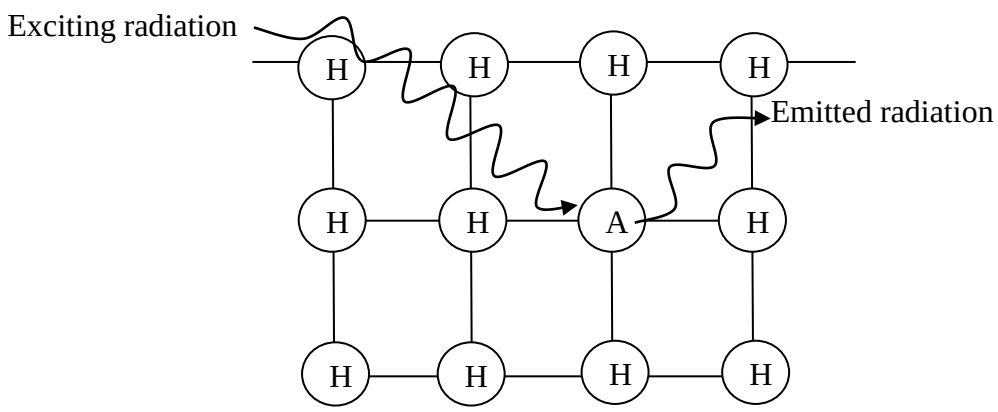

Figure 18-1 Excitation of the activators (A) distributed among the hosts (H)

Apparatus

Agate mortar and pestle, alumina crucible, hydraulic press, dies, plastic spatula, and box furnace.

Chemicals

Yttrium oxide, Y_2O_3
Europium oxide, Eu_2O_3

Procedure

1. Calculate the stoichiometric amounts of Y_2O_3 and Eu_2O_3 required to synthesize 0.005 mol of $Y_{1.9}Eu_{0.1}O_3$ fluorescent powder.
   Note 1: Include the calculation in the prelab report and verify the calculation results with the lab instructor.
   Note 2: The chemicals used in this experiment are very expensive. While weighing them, students should avoid wasting.
2. Transfer the weighed Y_2O_3 and Eu_2O_3 into an agate mortar. Mix them thoroughly with a plastic spatula and then grind the mixture with the agate pestle until a fine, uniform powder is obtained.
   Note: To avoid scratching of the mortar surface, the spatula used should be made of plastic. Wash and wipe the mortar and pestle after use.
3. Use the hydraulic press and dies to press the powder into a pellet under a pressure of 2 $ton \cdot cm^{-2}$.
   Note: Wash the pressing dies thoroughly with water to remove any powder stuck to its surface and then wipe-dry or blow-dry them with a hairdryer.
4. Place the pressed sample in the middle of an alumina crucible. Cover the crucible with its lid and put it into a box furnace. Allow the sample to calcine at 1100°C for 12 hours. (Raise and lower the temperature at a rate of 5°C/min.)
5. Let the furnace cool to room temperature. Collect the product, measure, and record its weight. Test its photoluminescent property by observing it under an ultraviolet light source of wavelength 366 nm and 254 nm.
   Caution: Avoid UV light shining on skin or eyes that may cause injury.

References

1. DeLuca, J. A. *J. Chem. Educ.* **1980**, *57*, 541.
2. She, J. L., and Liu, R. S. *Chemistry (The Chinese Chem. Soc., Taipei)*, **2002**, *60*, 273.